Centre de Météorologie Spatiale

METEO FRANCE

Preprocessing and processing data (1)

Panoramic view of the CMS operations room

The different levels of data

Satellite data in its raw state, namely as provided by the imager, cannot be used directly by the end user (the forecaster). For this reason, the data is processed in stages from the measurement on board the satellite to the final products, with each stage characterised by what is called a "level of data".

For Meteosat-8, the imager (SEVIRI - Spinning Enhanced Visible and InfraRed Imager) performs a measurement cycle every quarter of an hour, pixel by pixel, scanning the Earth from South to North and from East to West. This raw data collected by the Eumetsat ground segment at Darmstadt in Germany is called level 0 data.

The Eumetsat processing centre corrects this level 0 data in real time for radiometric and geometric effects. It also carries out a geolocation, still known as "rectification", which corrects the way the Earth is viewed from the fluctuating position of the satellite around its nominal position. The Eumetsat ground segment transcribes this data in a format known by the users. This data level is known as 1.5 (the data is still expressed in digital counts but the image is rectified and the files also contain metadata enabling this data to be calibrated, namely, converting the digital counts into physical quantities (the radiance that corresponds to an albedo for the visible channel and a brightness temperature for the infrared channels).

Processing geostationary data at the CMS

The single-channel imaging products resulting from processing by the CMS that can be displayed on the forecaster's workstation, correspond to a level that can be qualified as level 1.5+. The calibration has been applied and the data corresponds to a physical quantity (brightness temperature for the infrared channel images or the albedo for images in the visible channels). Above level 1.5+, it is no longer possible to retrieve the initial digital counts or to modify the calibration.

Level 2 is a more complex product level containing meteorological information. Multispectral colour-composite images and cloud classification are two examples. Levels 3 & 4 correspond to a product that can combine the information supplied by different instruments and/or measurement cycles (time synthesis). The sea surface temperature products of the Ocean and sea ice SAF are, for example, level 4 products since they are also resampled on a standard geographic grid.

DP/CMS May 2004

Polar orbiting satellites

For polar orbiting satellites, image geolocation is especially complex as the scanned area moves continually with the satellite itself, and the orbits shift each time the spacecraft passes through the station visibility zone. The preprocessing software of polar orbiting satellites developed at the CMS was used to generate the AAPP (AVHRR and ATOVS Preprocessing Package) software library that was made available to the world community through EUMETSAT. They enable the different levels of data required to be produced from the raw data received by an HRPT local station user.

level 0	raw data
level 1a	demultiplexed data, per instrument
level 1b	demultiplexed, geolocated data combined with their calibration coefficient
level 1c	geolocated calibrated data
level 1d	geolocated calibrated data after application of a cloud mask

Data preprocessing levels of polar orbiting satellites

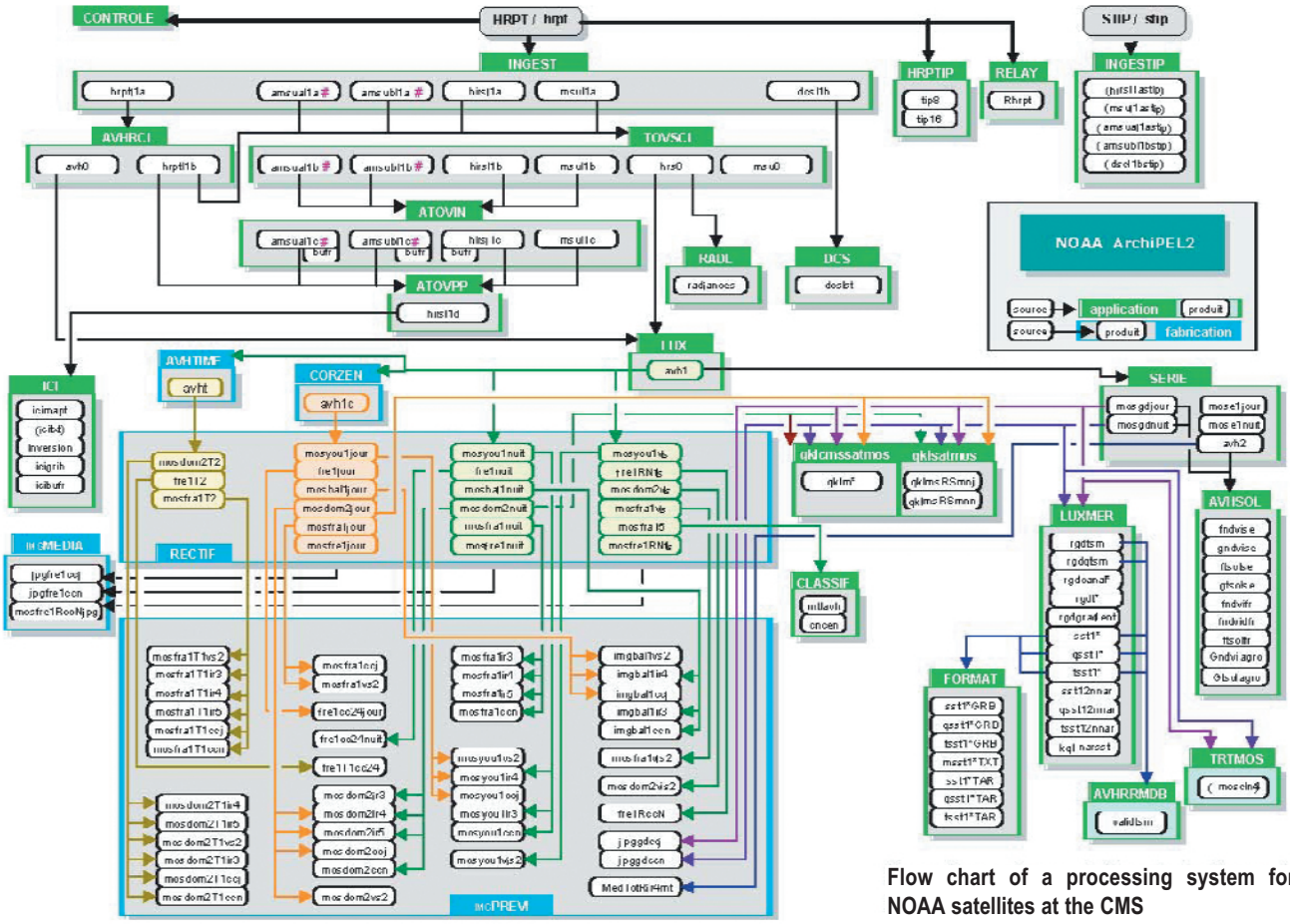

Flow chart of a processing system for NOAA satellites at the CMS

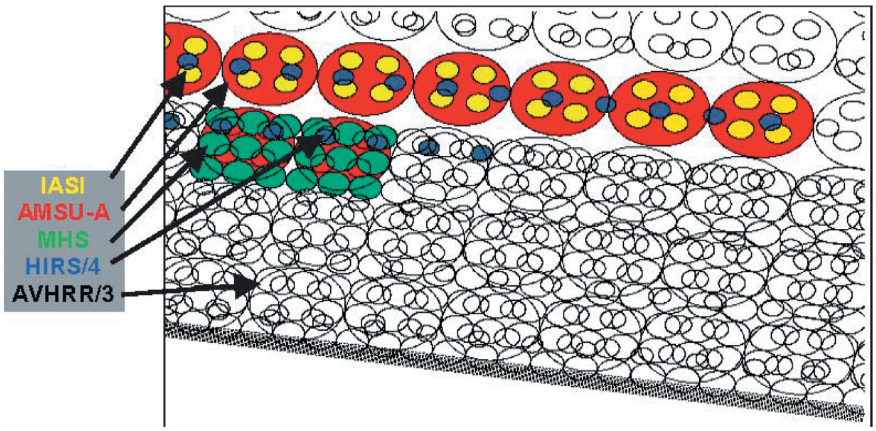

Diagram showing the location of the pixels of the different sounding instruments on board the future METOP satellite